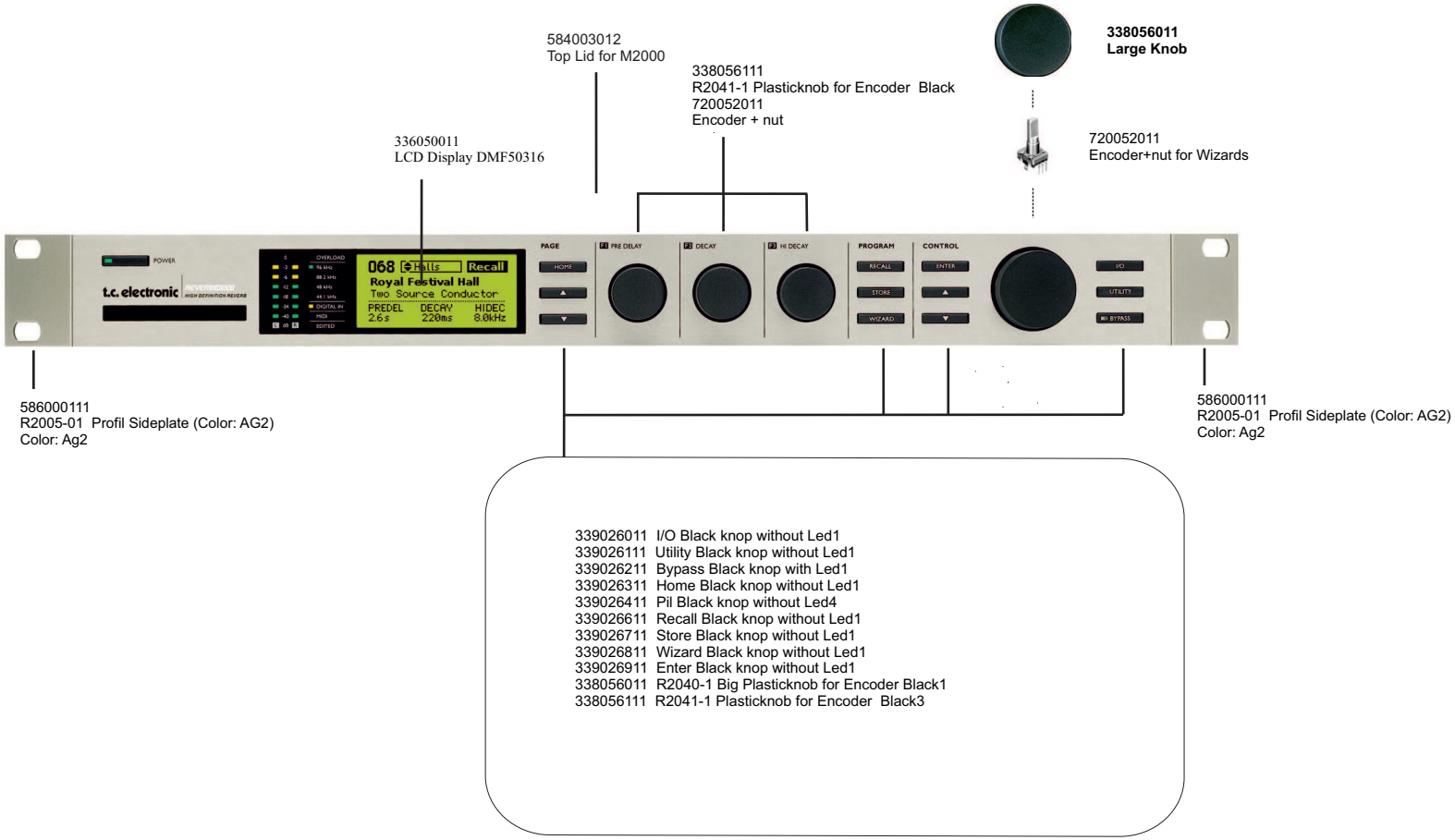Reverb 4000 high definition reverb