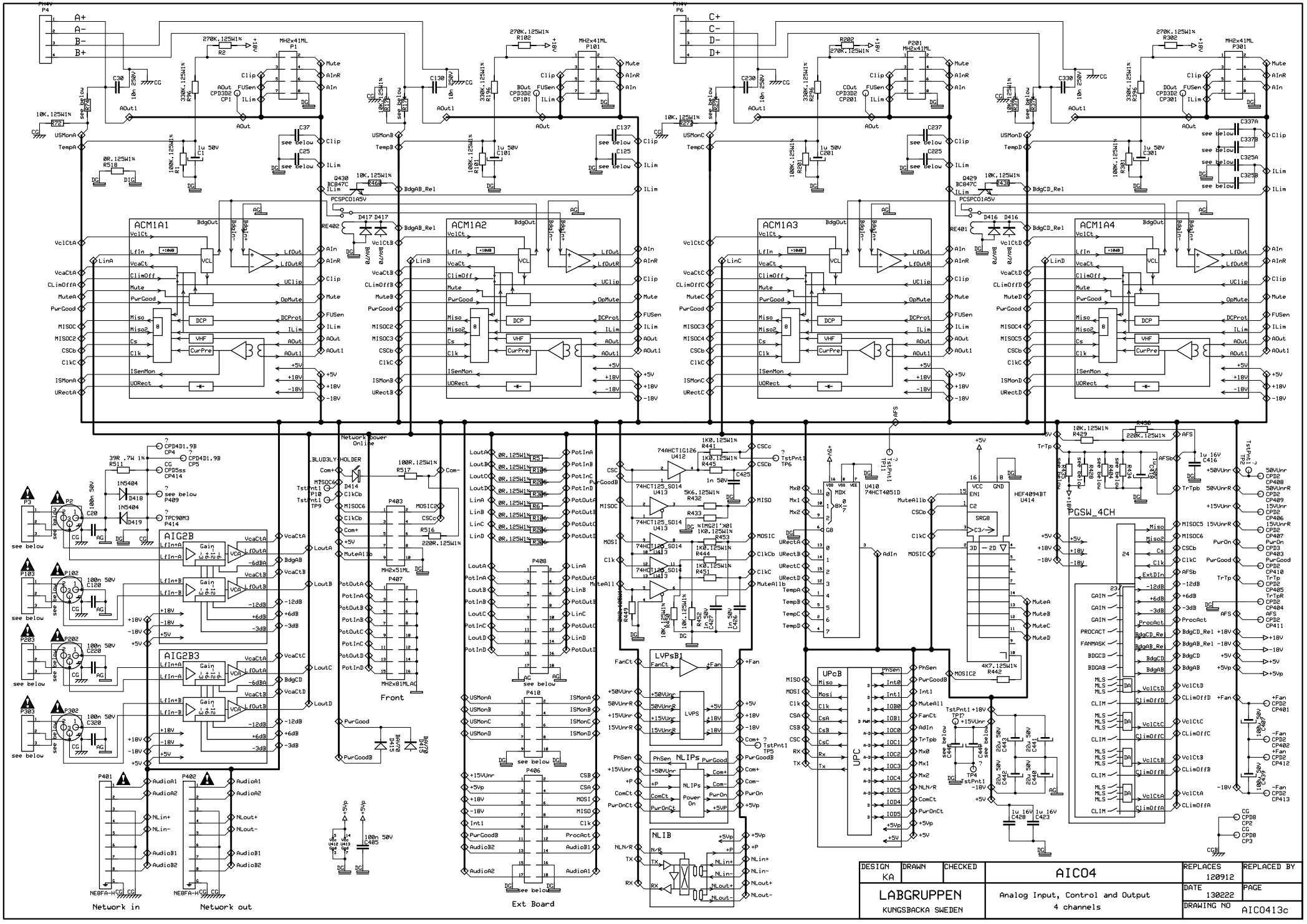
ACM1A1
ACM1A2
ACM1A3
ACM1A4
AIG2B
AIG2B3
LVPsB1
NLIPs
NLIB
UPcB
TGSW_4CH
Front
Network in
Network out
Ext Board
AIC04
LABGRUPPEN
KUNGSBACKA SWEDEN
Analog Input, Control and Output
4 channels
DESIGN KA
DRAWN
CHECKED
REPLACES 120912
REPLACED BY
DATE 130222
PAGE
DRAWING NO AIC0413c

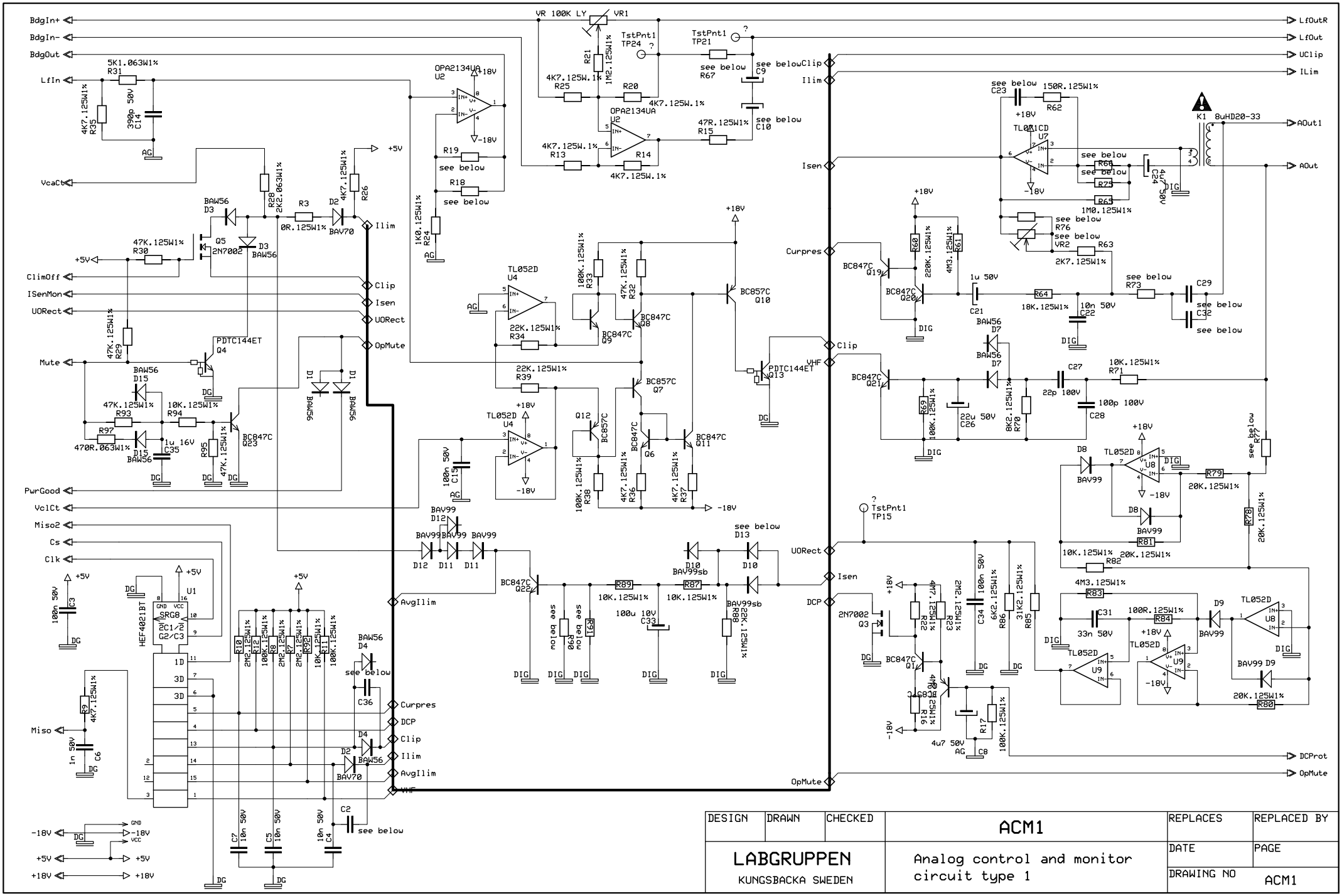

DESIGN	DRAWN	CHECKED	ACM1	REPLACES	REPLACED BY
LABGRUPPEN KUNGSBACKA SWEDEN			Analog control and monitor circuit type 1	DATE	PAGE
				DRAWING NO	ACM1

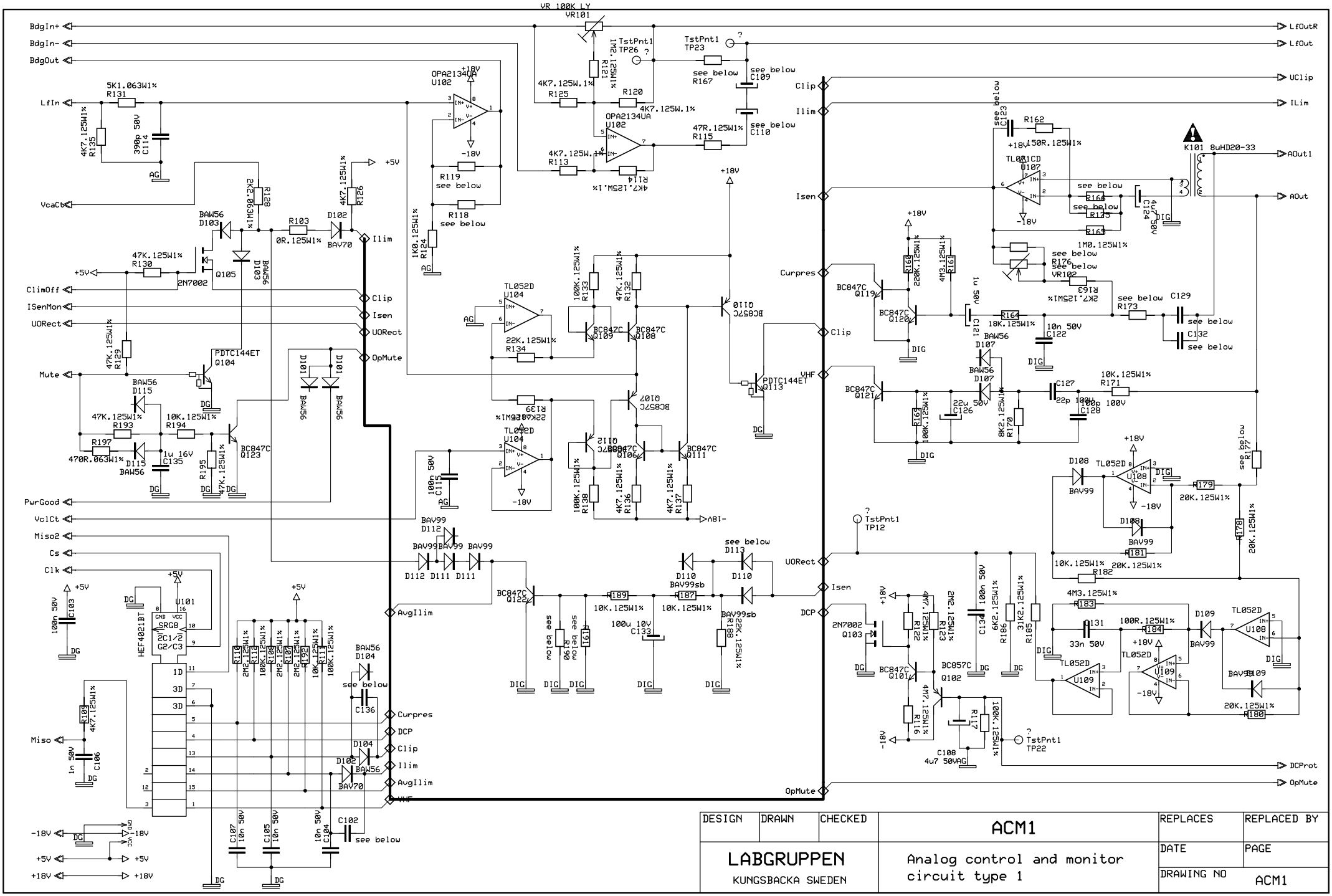
BdgIn+
BdgIn-
BdgOut
LfIn
VcaCt
ClimOff
ISenMon
UORect
Mute
PwrGood
VclCt
Miso2
Cs
Clk
Miso
-18V
+5V
+18V
VR 100K LY
VR101
OPA2134UA
U102
OPA2134UA
U102
TstPnt1
TP26
TstPnt1
TP23
TL052D
U104
TL052D
U104
PDTC144ET
Q104
PDTC144ET
Q113
BC847C
Q123
BC847C
Q119
BC847C
Q120
BC847C
Q109
BC847C
Q108
BC847C
Q112
BC847C
Q106
BC847C
Q111
BC847C
Q122
BD857C
Q110
BD857C
Q107
2N7002
Q105
2N7002
Q103
BC857C
Q102
BC847C
Q101
BAW56
D103
BAW56
D115
BAW56
D104
BAV70
D102
BAW56
D107
BAW56
D107
BAV99
D112
BAV99
D108
BAV99
D108
BAV99
D109
BAV99
D109
BAW56
D101
BAW56
D101
BAV99sb
D110
BAV99sb
D110
see below
D113
HEF4021BT
U101
SRG8
2C1/2
G2/C3
TL071CD
U107
TL052D
U108
TL052D
U108
TL052D
U109
TL052D
U109
K101 8uHD20-33
LfOutR
LfOut
UClip
ILim
AOut1
AOut
DCProt
OpMute
Clip
Ilim
Isen
Curpres
VHF
DCP
AvgIlim
TstPnt1
TP12
TstPnt1
TP22
5K1.063W1%
R131
4K7.125W1%
R135
390p 50V
C114
2K2.125W1%
R128
4K7.125W1%
R126
0R.125W1%
R103
47K.125W1%
R130
47K.125W1%
R129
47K.125W1%
R193
10K.125W1%
R194
470R.063W1%
R197
47K.125W1%
R195
1u 16V
C135
4K7.125W.1%
R125
4K7.125W.1%
R120
4K7.125W.1%
R113
47R.125W1%
R115
4K7.125SW.1%
R121
4K7.125SW.1%
R114
1K0.125W1%
R124
see below
R119
see below
R118
100K.125W1%
R133
47K.125W1%
R132
22K.125W1%
R134
22K.125W1%
R139
100K.125W1%
R138
4K7.125W1%
R136
4K7.125W1%
R137
100n 50V
C116
BAV99
D112
BAV99
BAV99
BAV99
D112 D111 D111
10K.125W1%
R189
10K.125W1%
R187
100u 10V
C133
22K.125W1%
R188
see below
R161
see below
R160
see below
R162
150R.125W1%
see below
R164
see below
R175
see below
R163
1M0.125W1%
see below
R176
see below
VR102
2K7.125SW1%
R163
see below
R173
see below
C129
see below
C132
see below
C123
see below
C124
4u7 50V
1u 50V
C121
18K.125W1%
R164
10n 50V
C122
220K.125W1%
R169
4M3.125W1%
R161
BAW56
D107
22u 50V
C126
22p 100V
C127
100p 100V
C128
10K.125W1%
R171
100K.125W1%
R163
8K2.125W1%
R170
see below
R177
20K.125W1%
R179
20K.125W1%
R178
10K.125W1%
R182
20K.125W1%
R181
4M3.125W1%
R183
33n 50V
C131
100R.125W1%
R184
20K.125W1%
R180
2M2.125W1%
R122
2M2.125W1%
R123
4M7.125W1%
R116
4M7.125W1%
R117
100K.125SW1%
R118
100n 50V
C134
6K2.125W1%
R186
31K2.125W1%
R185
4u7 50VAG
C108
100n 50V
C103
1n 50V
C106
10n 50V
C107
10n 50V
C105
10n 50V
C104
see below
C102
see below
C136
see below
C110
see below
C109
see below
R167
see below
R168
see below
R161
see below
R160
see below
R165
see below
R166
see below
R174
see below
R172
see below
R175
see below
R176
see below
R177
see below
R178
see below
R179
see below
R180
see below
R181
see below
R182
see below
R183
see below
R184
see below
R185
see below
R186
see below
R187
see below

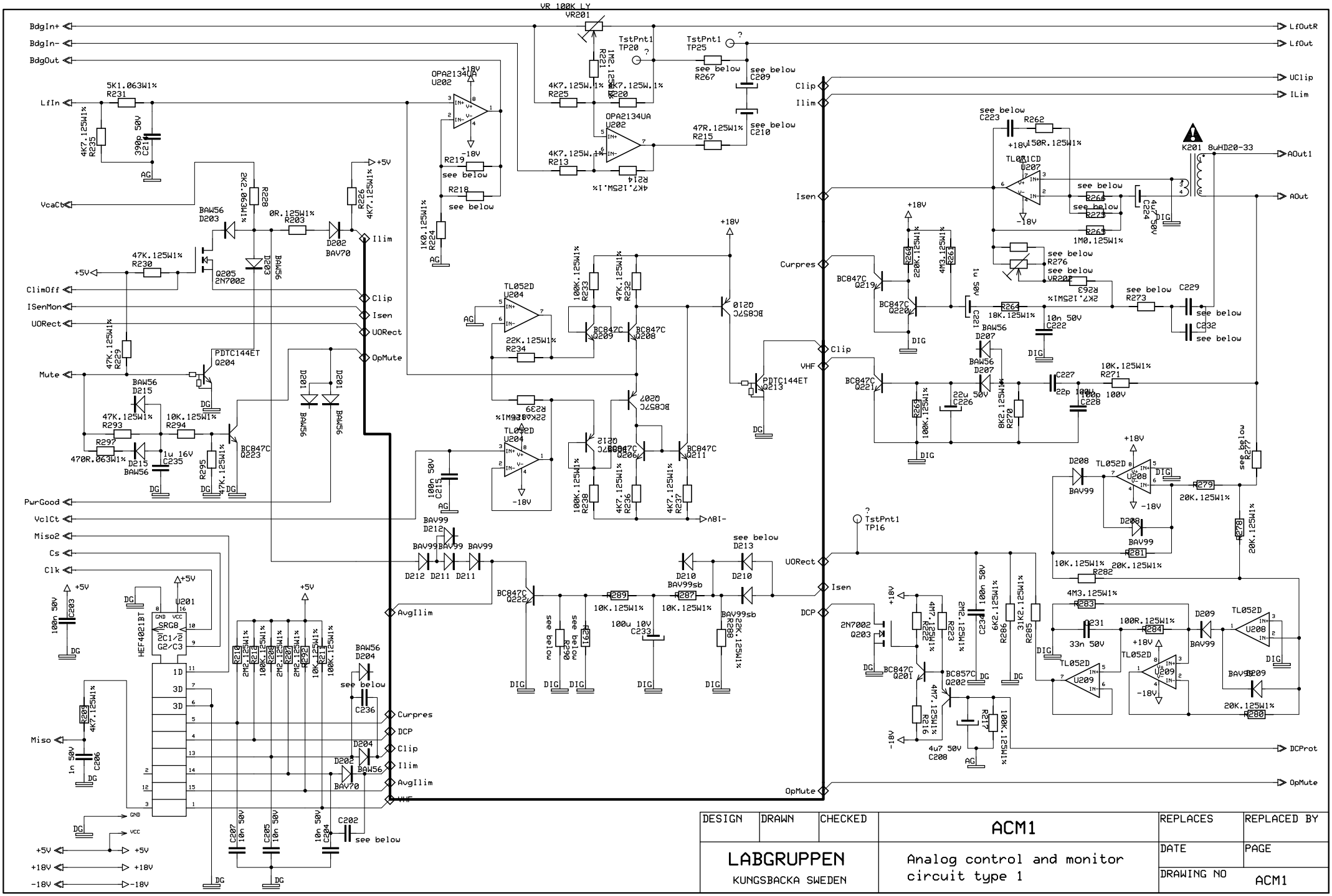

DESIGN	DRAWN	CHECKED	ACM1	REPLACES	REPLACED BY
				DATE	PAGE
LABGRUPPEN KUNGSBACKA SWEDEN			Analog control and monitor circuit type 1	DRAWING NO	ACM1

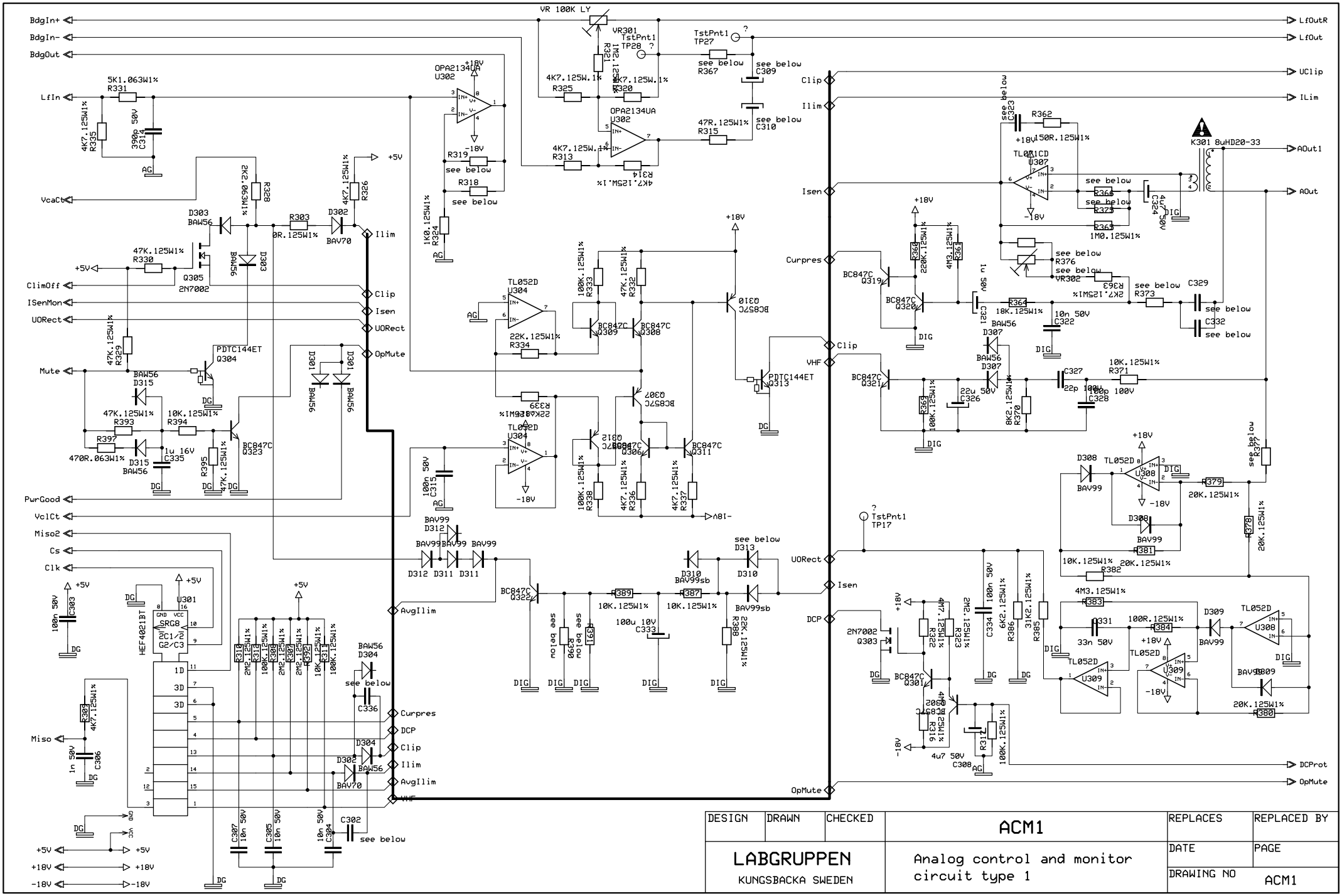

DESIGN	DRAWN	CHECKED	ACM1	REPLACES	REPLACED BY
				DATE	PAGE
LABGRUPPEN KUNGSBACKA SWEDEN			Analog control and monitor circuit type 1	DRAWING NO	ACM1

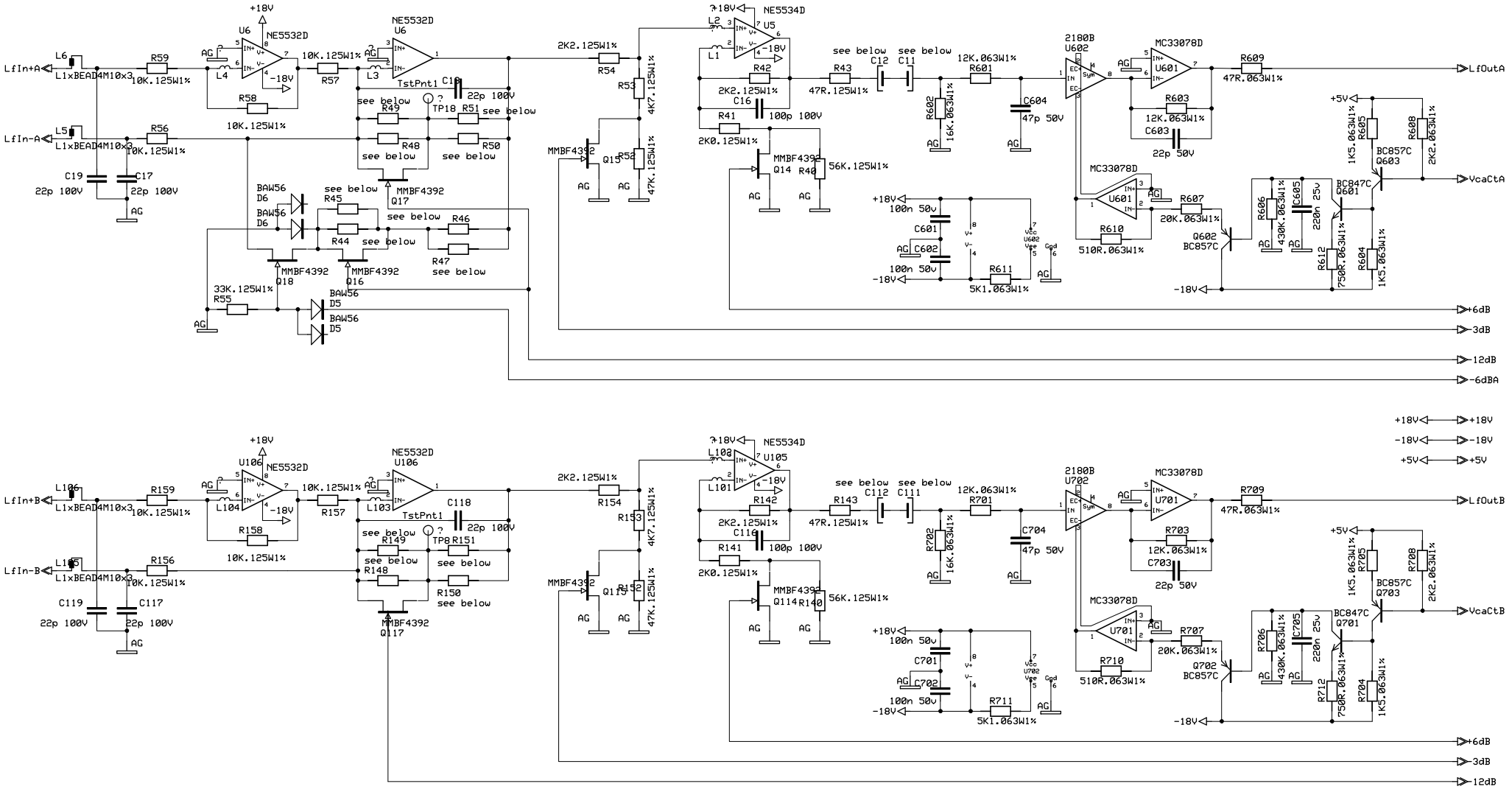

DESIGN	DRAWN	CHECKED		REPLACES	REPLACED BY
LABGRUPPEN				DATE	PAGE
KUNGSBACKA SWEDEN				DRAWING NO	

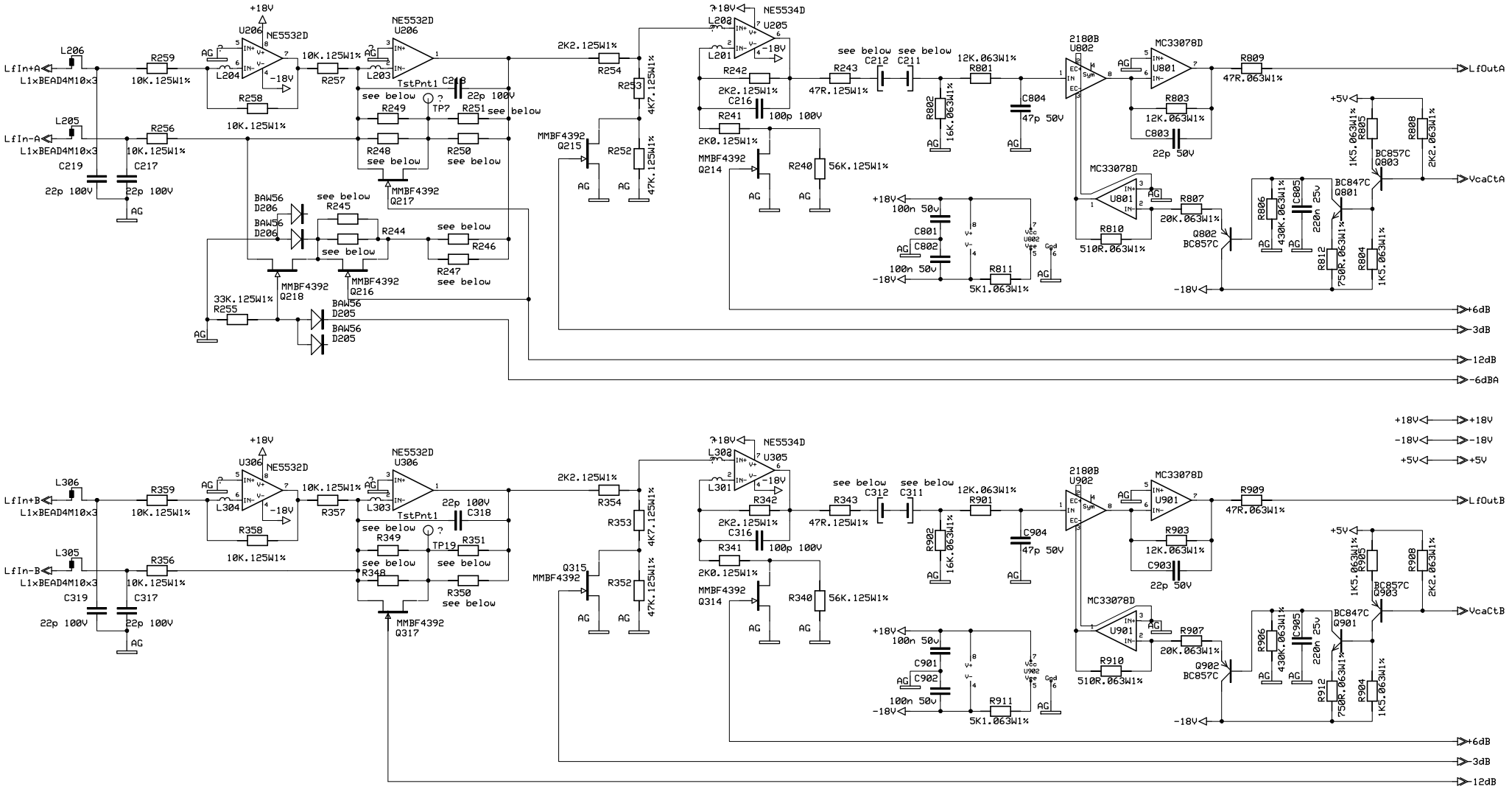

DESIGN	DRAWN	CHECKED		REPLACES	REPLACED BY
LABGRUPPEN KUNGSBACKA SWEDEN				DATE	PAGE
				DRAWING NO	

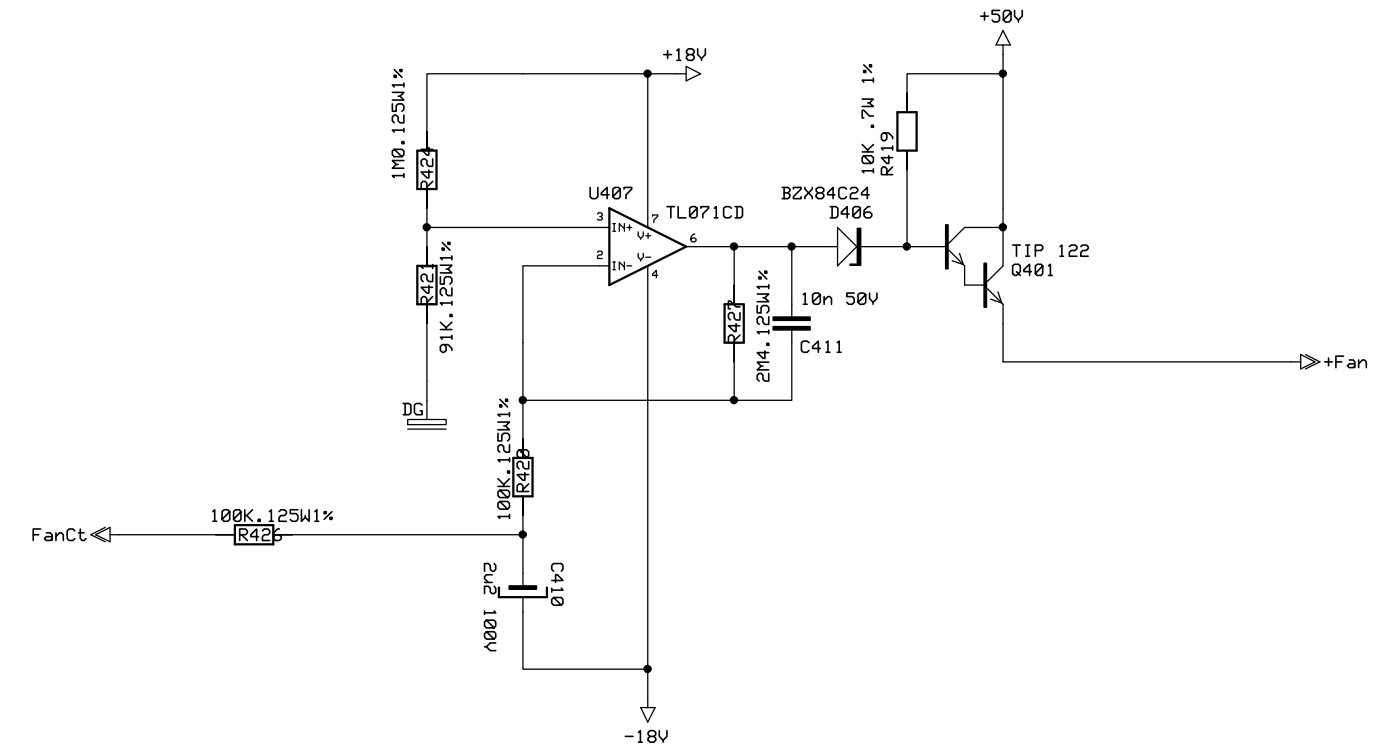

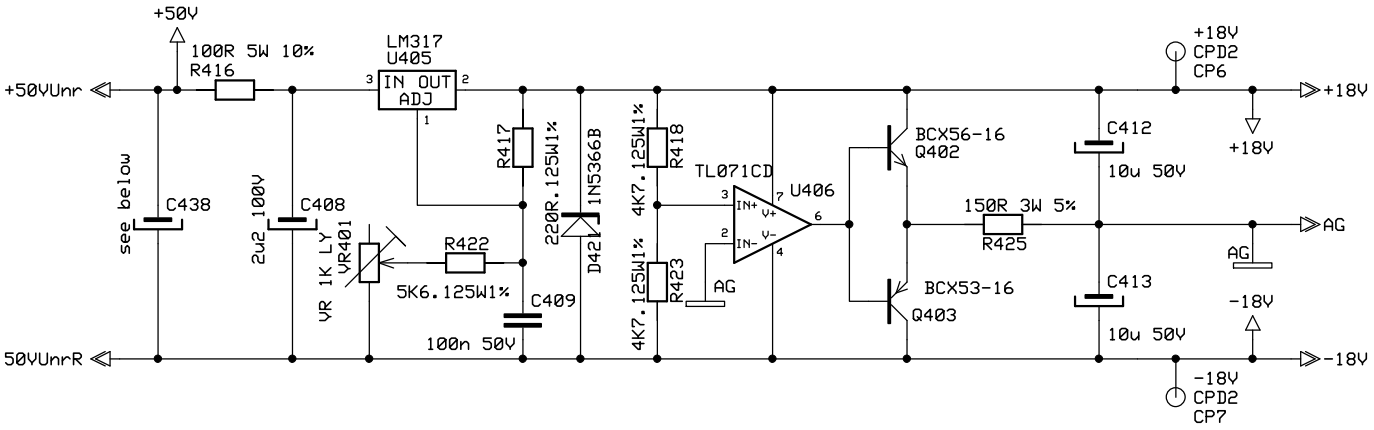

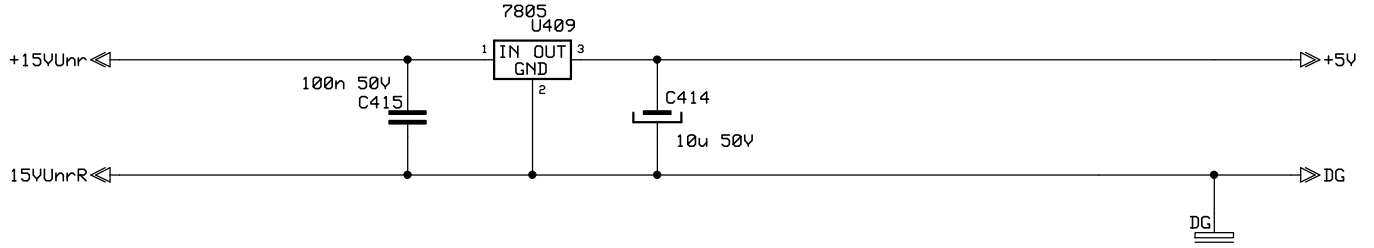

DESIGN	DRAWN	CHECKED	LVPsB	REPLACES	REPLACED BY
KA					
LABGRUPPEN KUNGSBACKA SWEDEN			Low voltage power supply type1	DATE	PAGE
				DRAWING NO	LVPsB

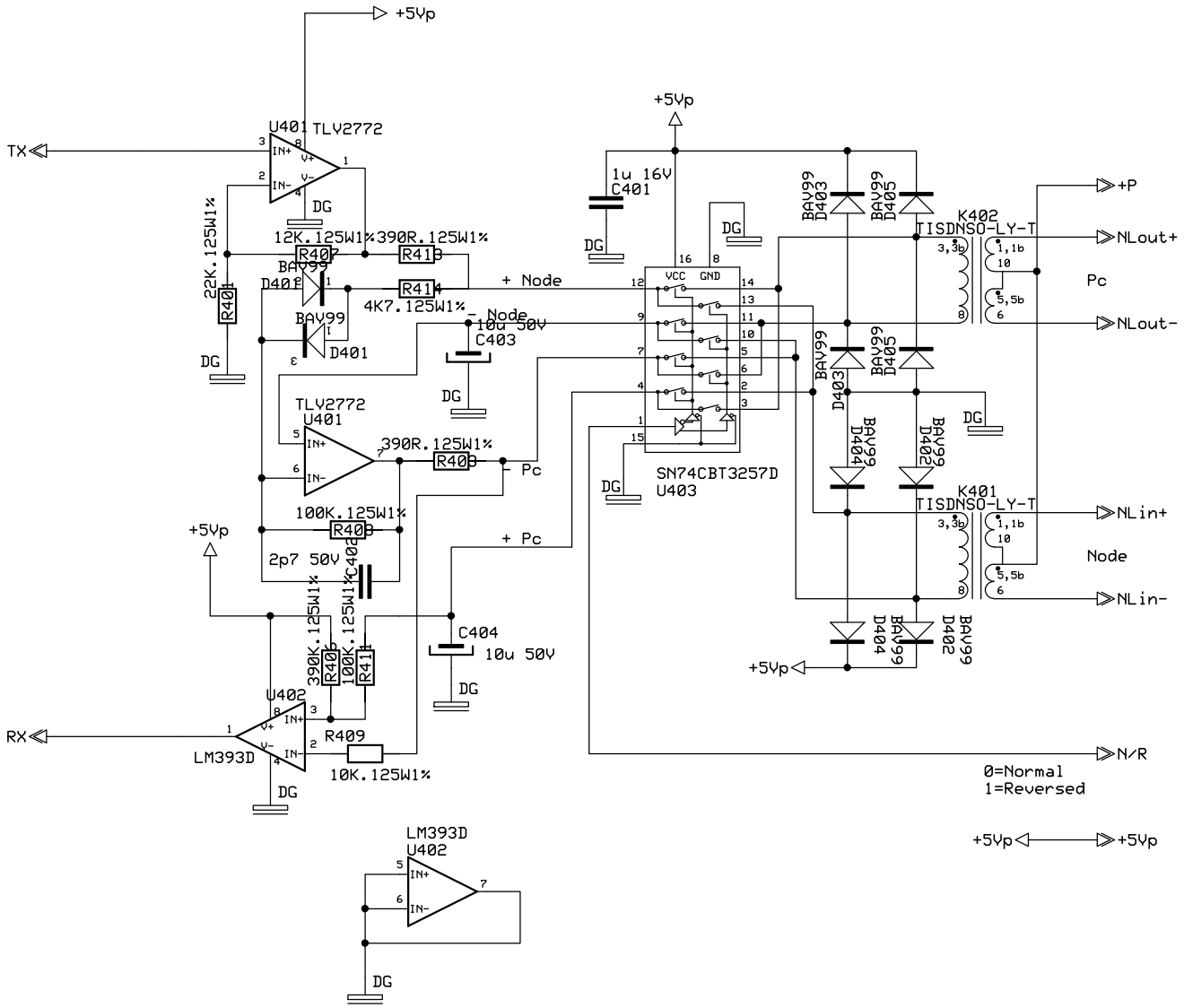

DESIGN	DRAWN	CHECKED	NLI	REPLACES	REPLACED BY
LABGRUPPEN KUNGSBACKA SWEDEN			Nomad link interface	DATE	PAGE
				DRAWING NO	

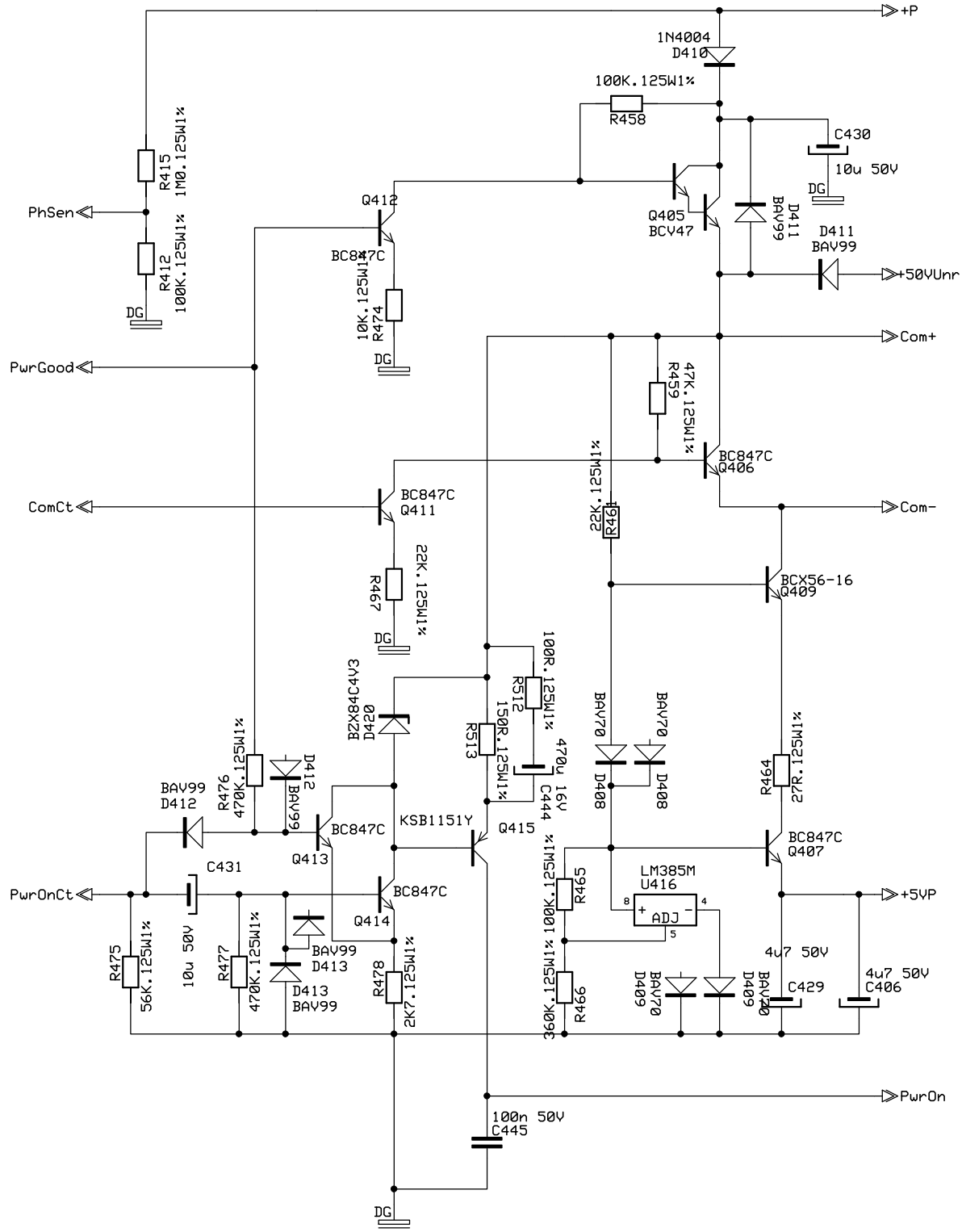

DESIGN	DRAWN	CHECKED	NLIPs	REPLACES	REPLACED BY
KA					
LABGRUPPEN KUNGSBACKA SWEDEN			Nomad Link Interface Power Supply	DATE	PAGE
				DRAWING NO	NLIPs

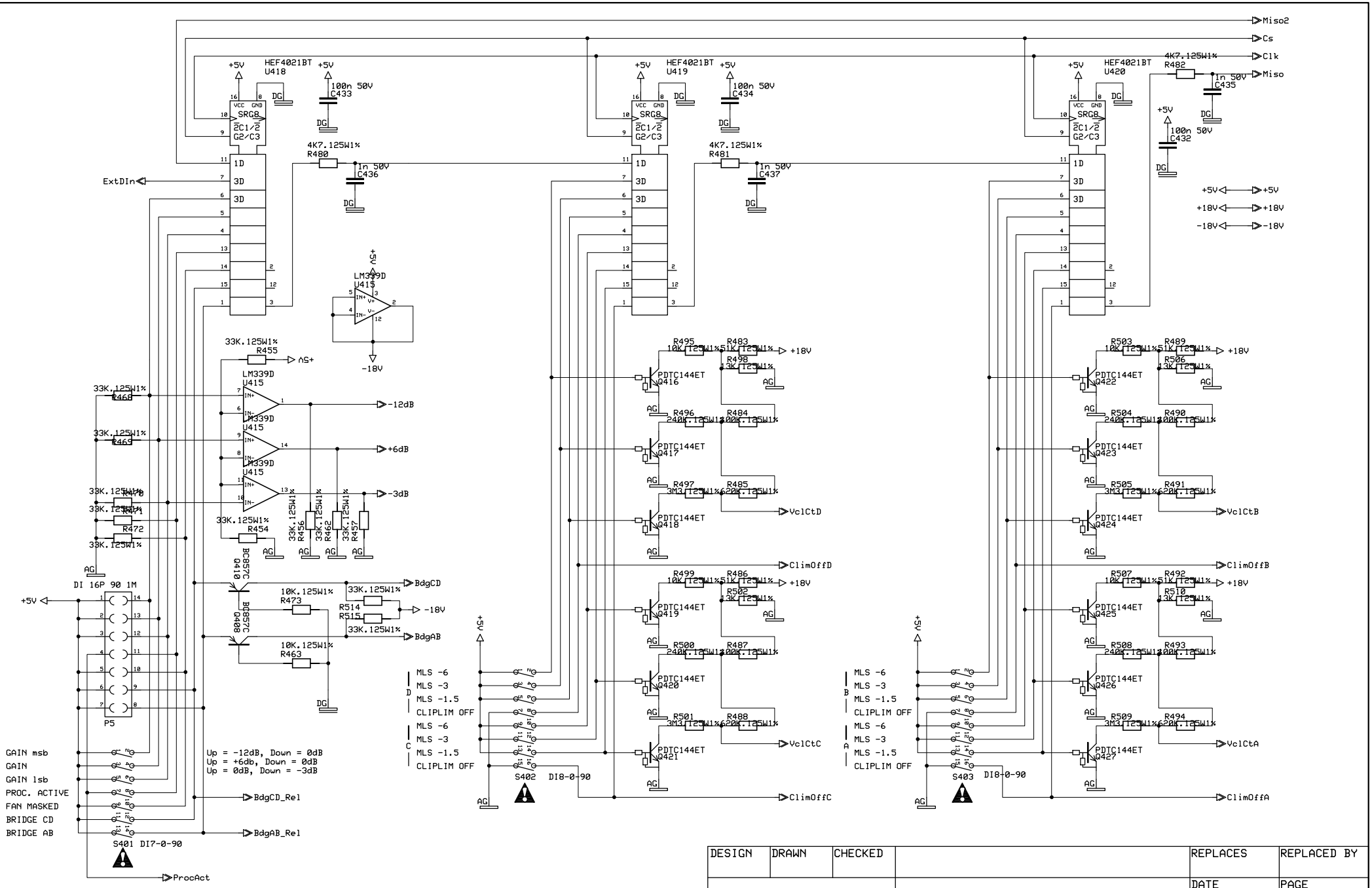

DESIGN	DRAWN	CHECKED		REPLACES	REPLACED BY
LABGRUPPEN				DATE	PAGE
KUNGSBACKA SWEDEN				DRAWING NO	

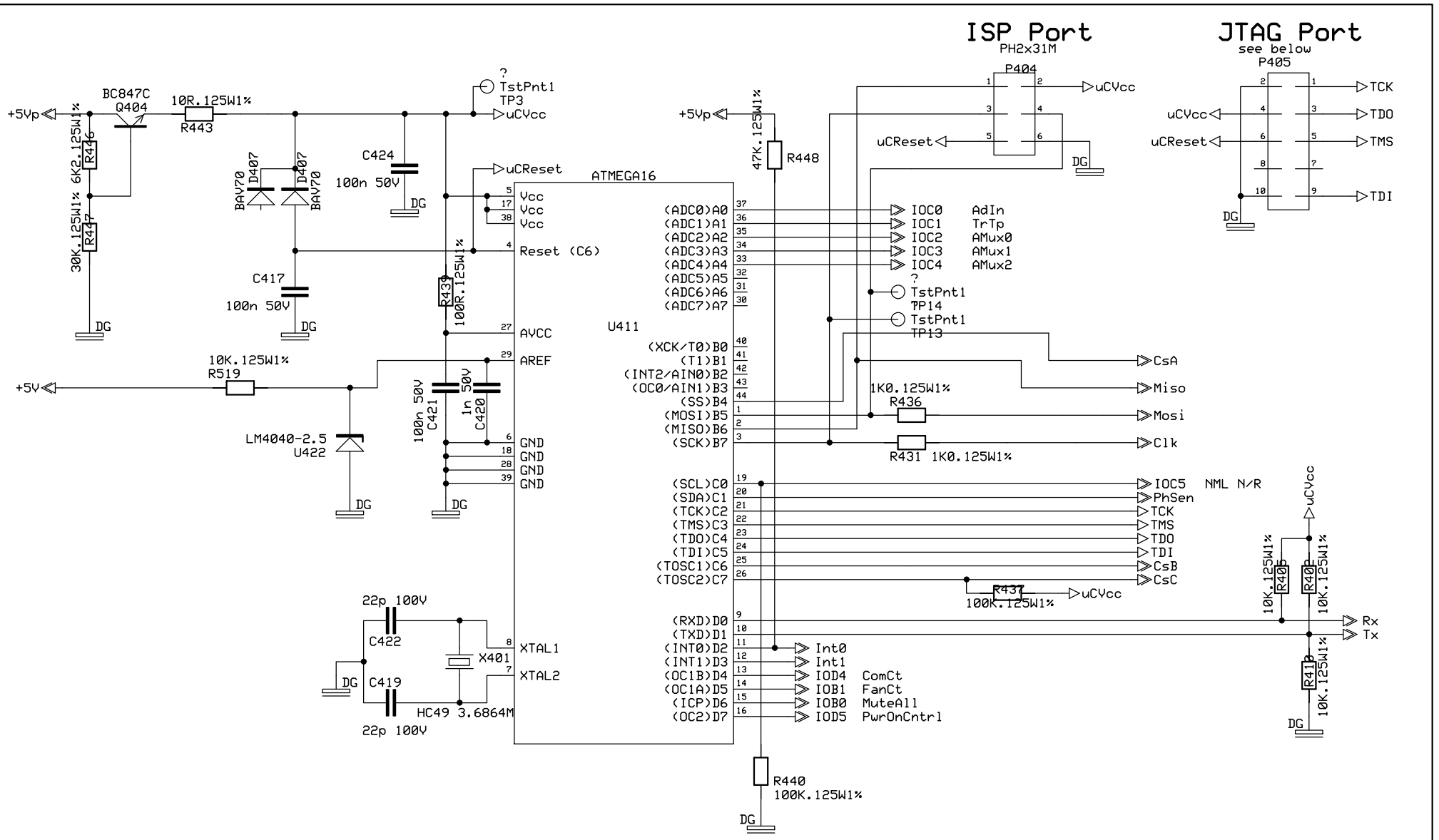

DESIGN	DRAWN	CHECKED	UPcB	REPLACES	REPLACED BY
LABGRUPPEN KUNGSBACKA SWEDEN			Micro Processor unit typeB	DATE	PAGE
				DRAWING NO	UPcB