Area reserved for document binding

Best printed and viewed on sheetsize A4

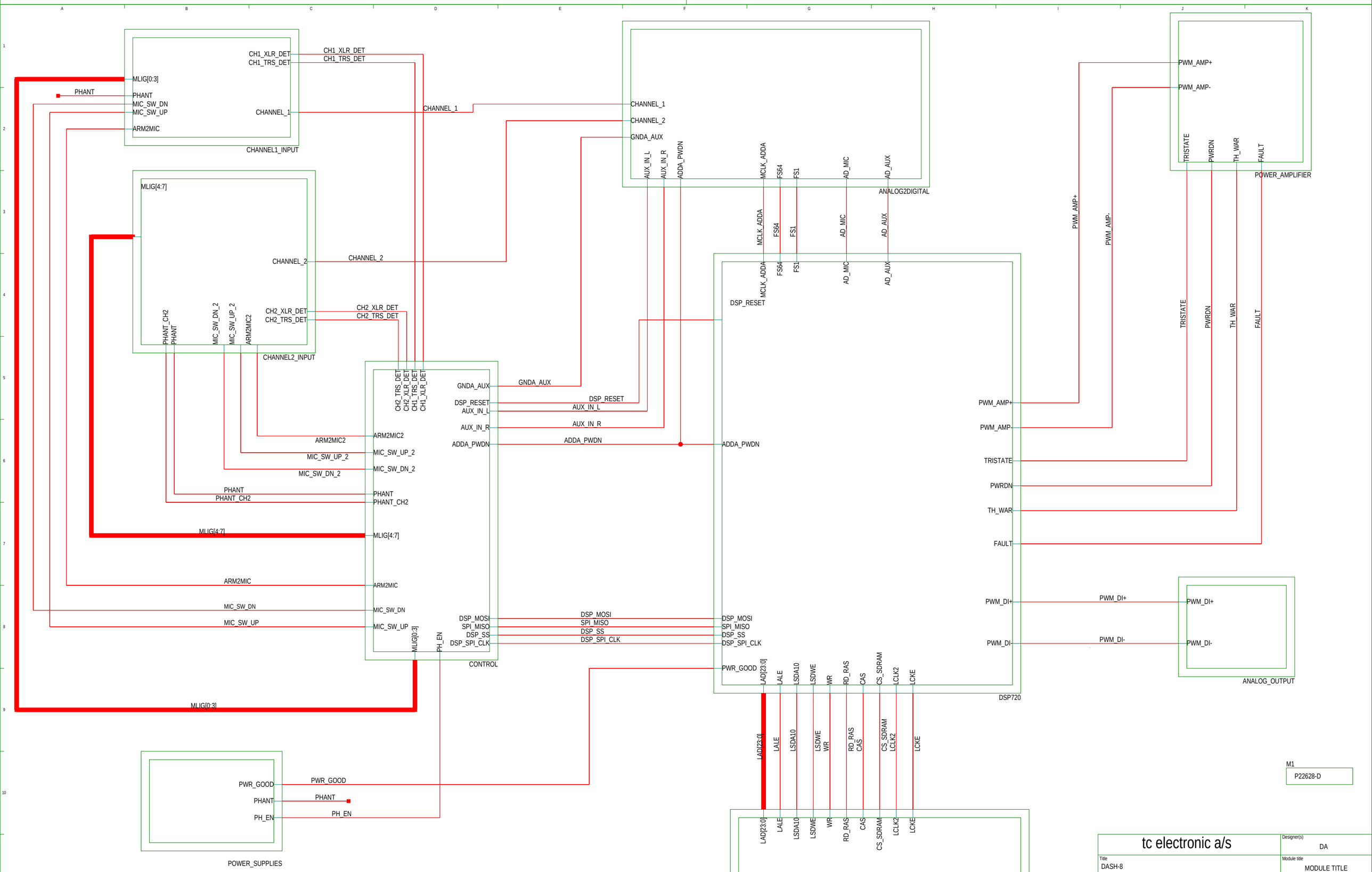

M1

P22628-D

tc electronic a/s				Designer(s) DA	
Title DASH-8				Module title MODULE TITLE	
Number P22628	Revision D	Variant A	Version B	Board type MAINBOARD	
Date 05-03-2014_13:28	Filename p22628-B			Page / of 1 / 10	

Area reserved for document binding

Best printed and viewed on sheetsize A4

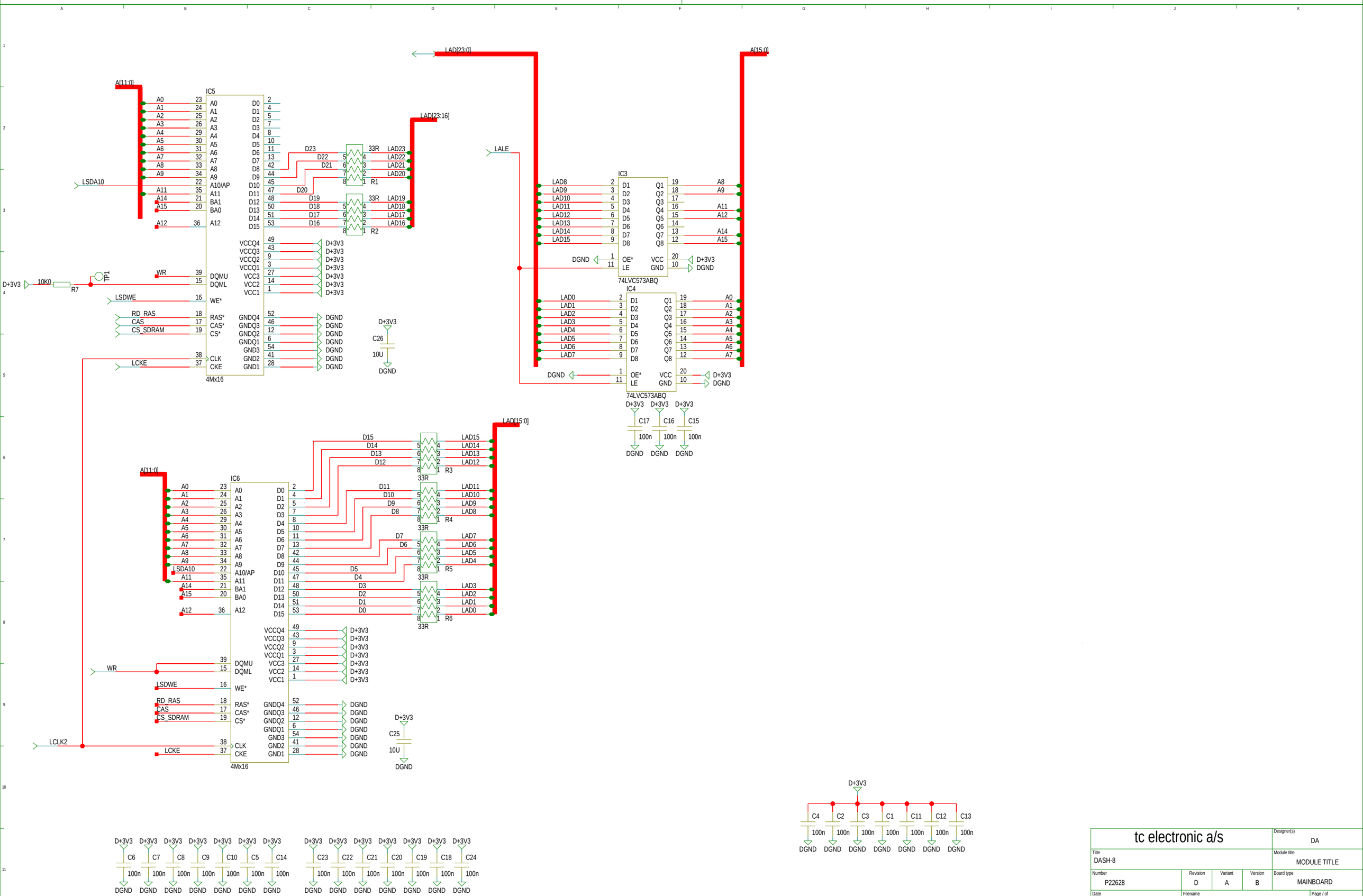

tc electronic a/s				Designer(s): DA
Title: DASH-8				Module title: MODULE TITLE
Number: P22628	Revision: D	Variant: A	Version: B	Board type: MAINBOARD
Date: 05-03-2014_13:28	Filename: memory			Page / of: 1 / 10

Area reserved for document binding

Best printed and viewed on sheetsize A4

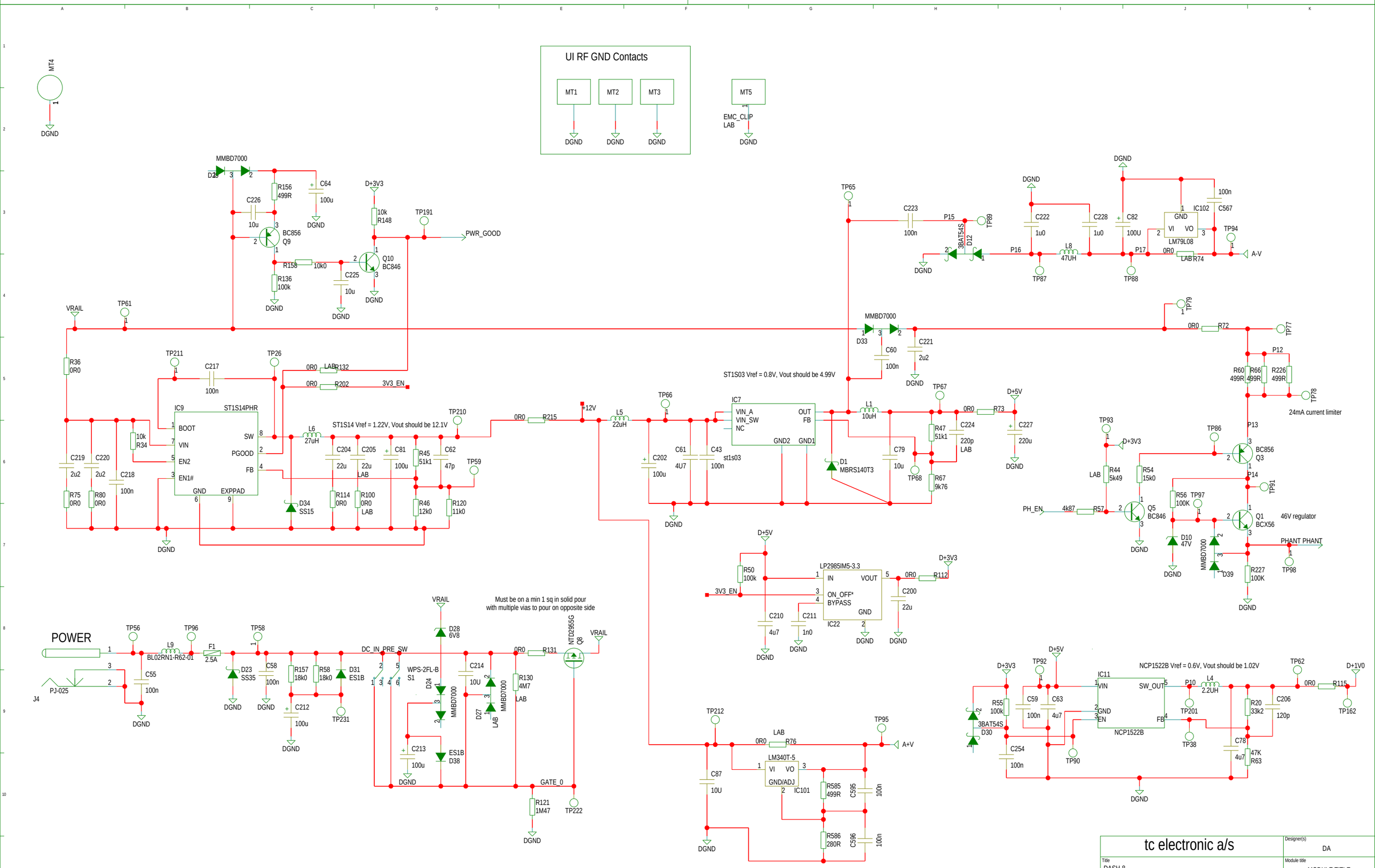

tc electronic a/s				Designer(s): DA
Title: DASH-8				Module title: MODULE TITLE
Number: P22628	Revision: D	Variant: A	Version: B	Board type: MAINBOARD
Date: 05-03-2014_13:28	Filename: power_supplies			Page / of: 1 / 10

Area reserved for document binding

Best printed and viewed on sheetsize A4

MIC/LINE INPUT

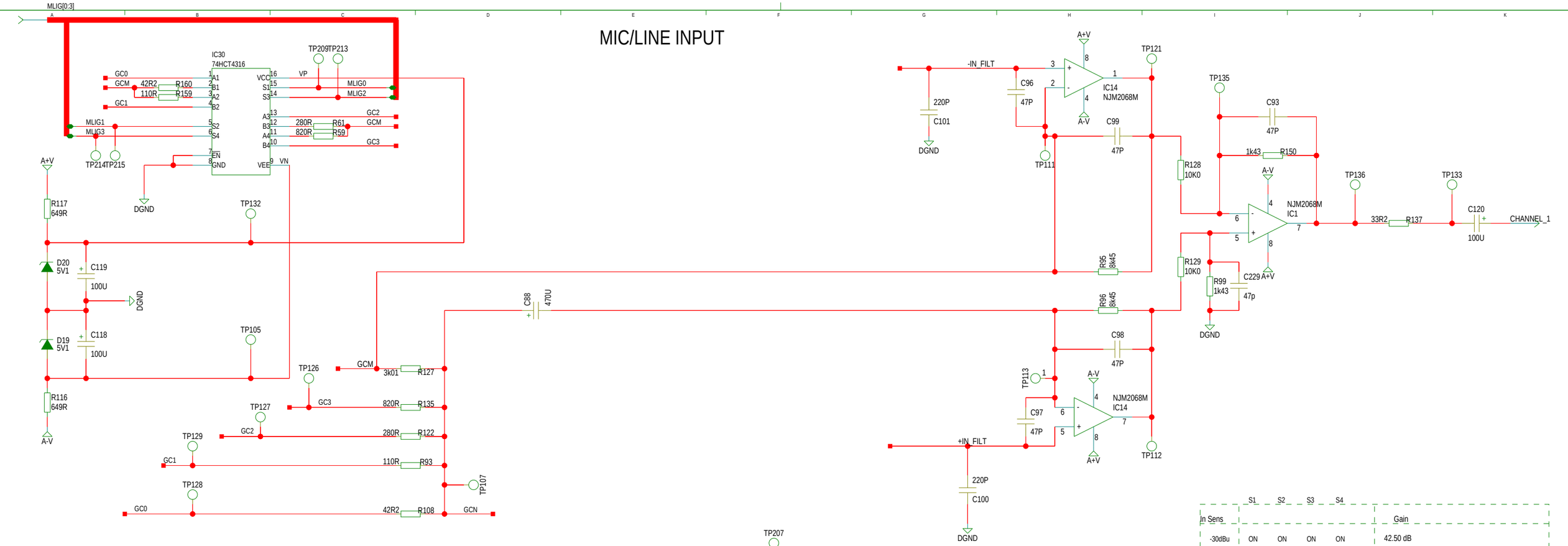

In Sens	S1	S2	S3	S4	Gain
-30dBu	ON	ON	ON	ON	42.50 dB
-22dBu	ON	ON	ON	OFF	34.97dB
-14dBu	ON	ON	OFF	OFF	27.22dB
-6dBu	ON	OFF	OFF	OFF	18.39dB
+2dBu	OFF	OFF	OFF	OFF	10.46 dB

tc electronic a/s				Designer(s): DA
Title: DASH-8				Module title: MODULE TITLE
Number: P22628	Revision: D	Variant: A	Version: B	Board type: MAINBOARD
Date: 05-03-2014_13:28	Filename: channel1_input			Page / of: 1 / 10

Area reserved for document binding

Best printed and viewed on sheetsize A4

5-Pole Butterworth LPF fc = 50kHz

+2 dBu at PWM Full Scale

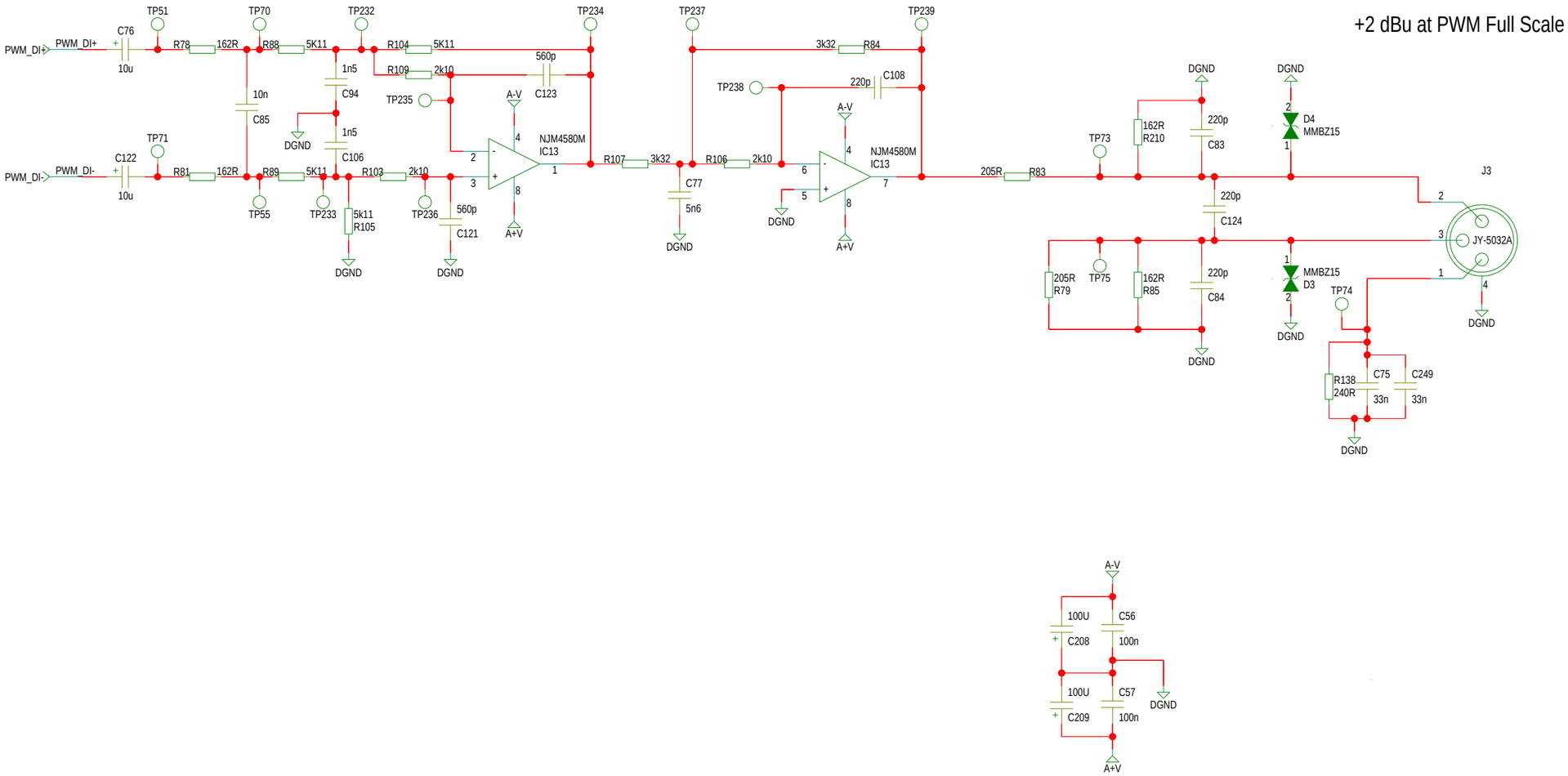

tc electronic a/s				Designer(s): DA
Title: DASH-8				Module title: MODULE TITLE
Number: P22628	Revision: D	Variant: A	Version: B	Board type: MAINBOARD
Date: 05-03-2014_13:28	Filename: analog_output			Page / of: 1 / 10

Area reserved for document binding

Best printed and viewed on sheetsize A4

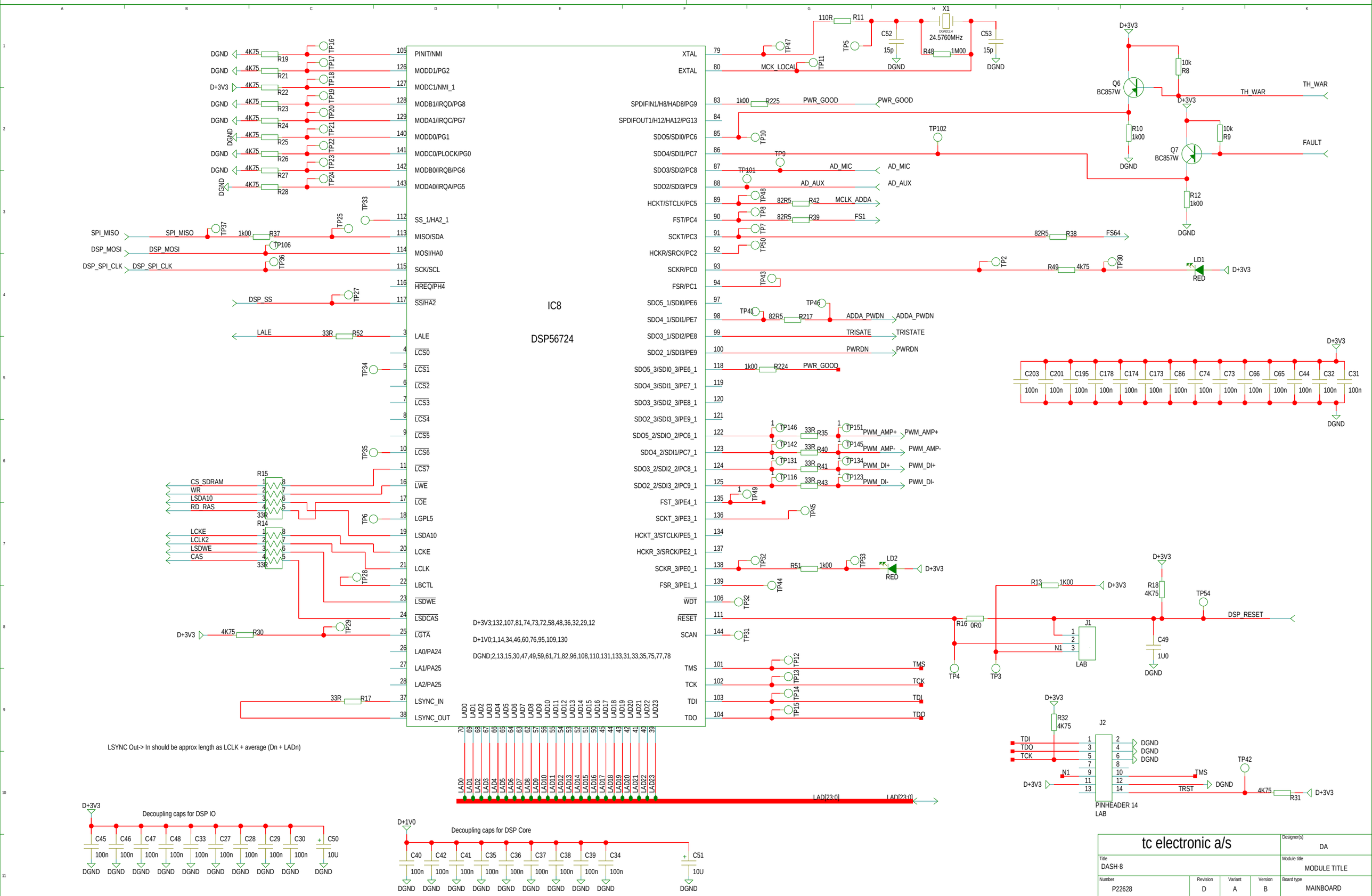

tc electronic a/s				Designer(s): DA
Title: DASH-8				Module title: MODULE TITLE
Number: P22628	Revision: D	Variant: A	Version: B	Board type: MAINBOARD
Date: 05-03-2014_13:28	Filename: dsp720			Page / of: 1 / 10

Area reserved for document binding

Best printed and viewed on sheetsize A4

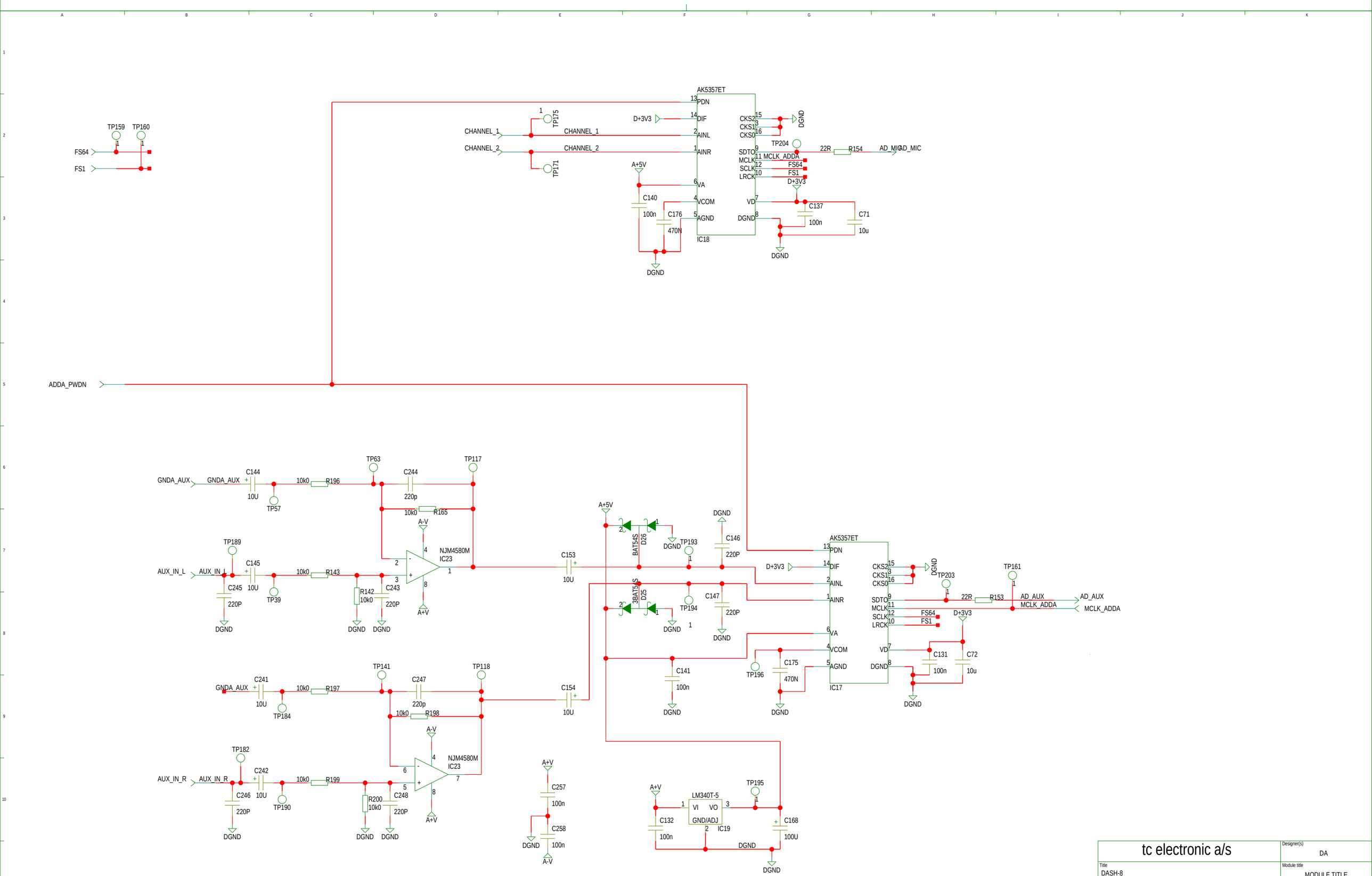

tc electronic a/s				Designer(s): DA
Title: DASH-8				Module title: MODULE TITLE
Number: P22628	Revision: D	Variant: A	Version: B	Board type: MAINBOARD
Date: 05-03-2014_13:28	Filename: analog2digital			Page / of: 1 / 10

Area reserved for document binding

Best printed and viewed on sheetsize A4

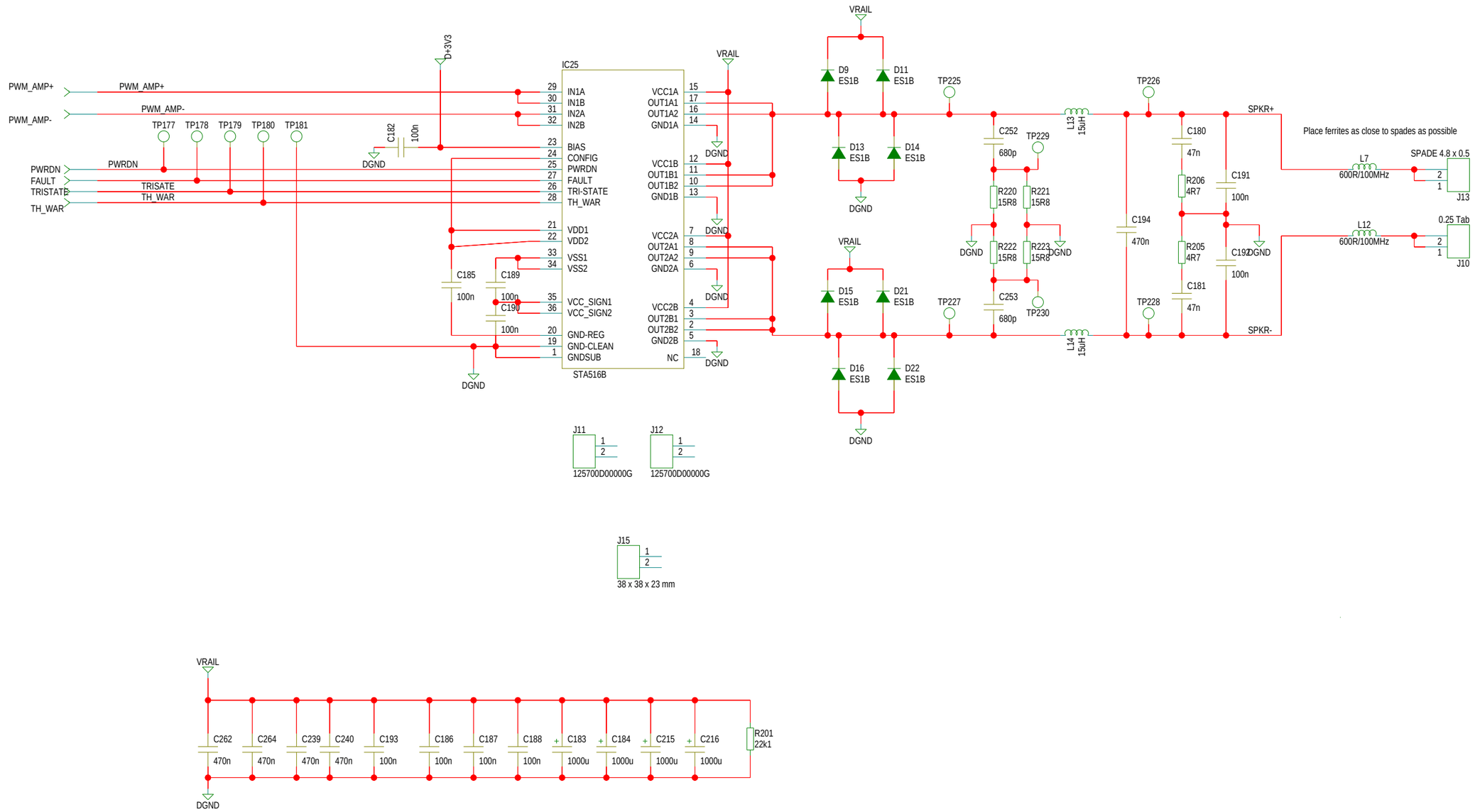

tc electronic a/s				Designer(s): DA
Title: DASH-8				Module title: MODULE TITLE
Number: P22628	Revision: D	Variant: A	Version: B	Board type: MAINBOARD
Date: 05-03-2014_13:29	Filename: Power_Amplifier			Page / of: 1 / 10

Area reserved for document binding

Best printed and viewed on sheetsize A4

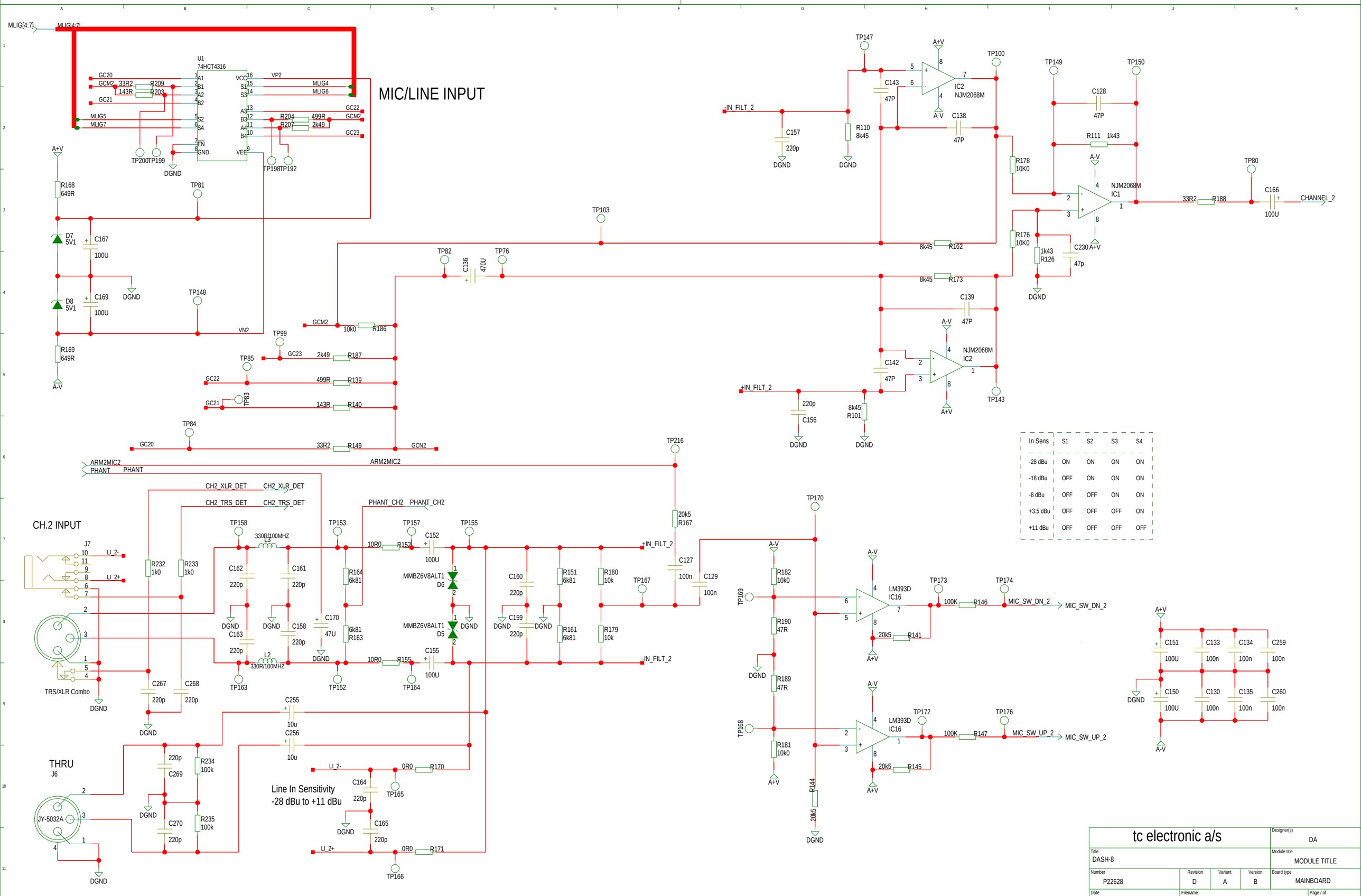

In Sens	S1	S2	S3	S4
-28 dBu	ON	ON	ON	ON
-18 dBu	OFF	ON	ON	ON
-8 dBu	OFF	OFF	ON	ON
+3.5 dBu	OFF	OFF	OFF	ON
+11 dBu	OFF	OFF	OFF	OFF

tc electronic a/s				Designer(s): DA
Title: DASH-8				Module title: MODULE TITLE
Number: P22628	Revision: D	Variant: A	Version: B	Board type: MAINBOARD
Date: 05-03-2014_13:29	Filename: channel2_input			Page / of: 1 / 10

Area reserved for document binding

Best printed and viewed on sheetsize A4

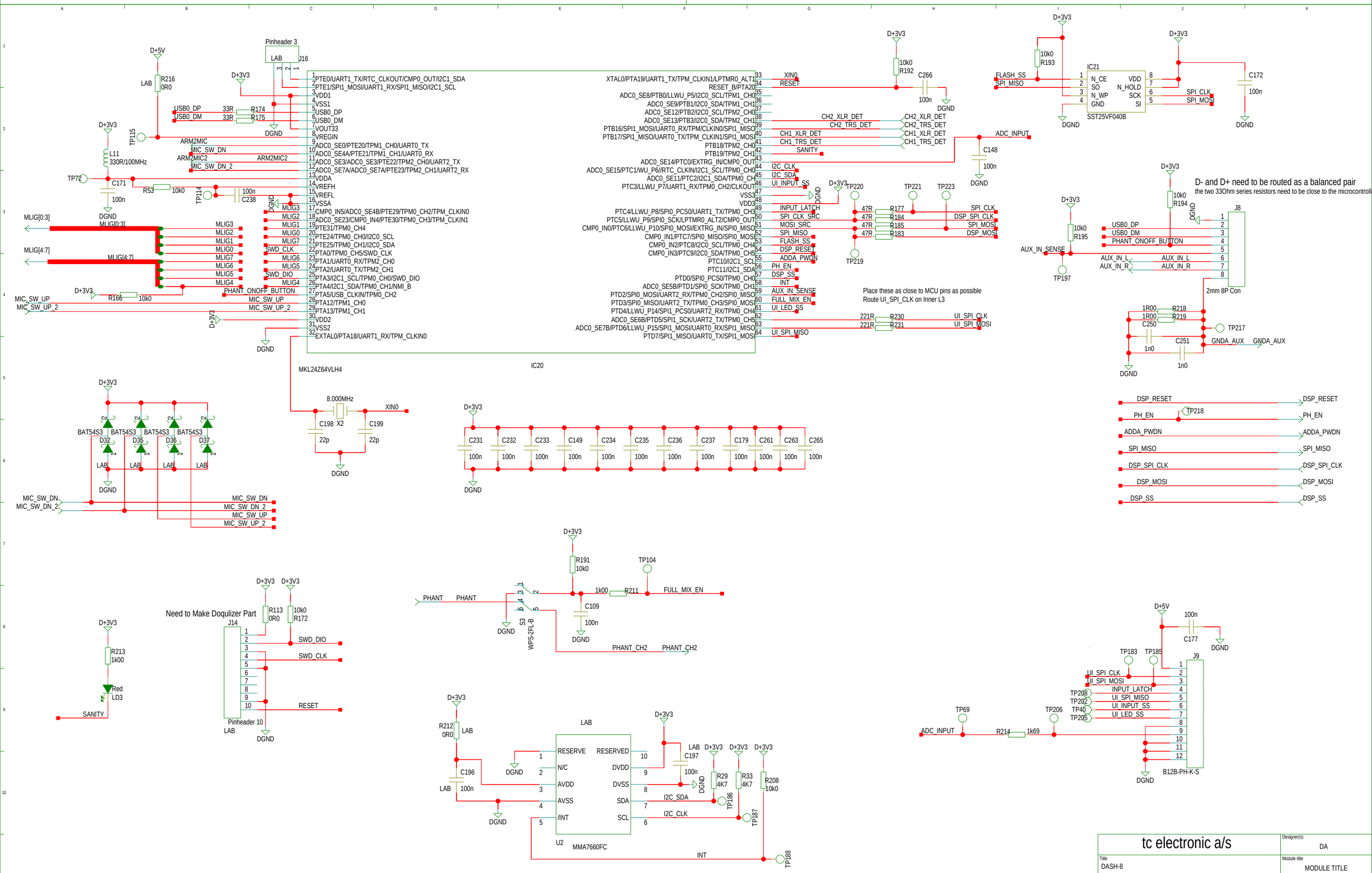

tc electronic a/s				Designer(s): DA
Title: DASH-8				Module title: MODULE TITLE
Number: P22628	Revision: D	Variant: A	Version: B	Board type: MAINBOARD
Date: 05-03-2014_13:29	Filename: control			Page / of: 1 / 10