THIRD ANGLE PROJECTION

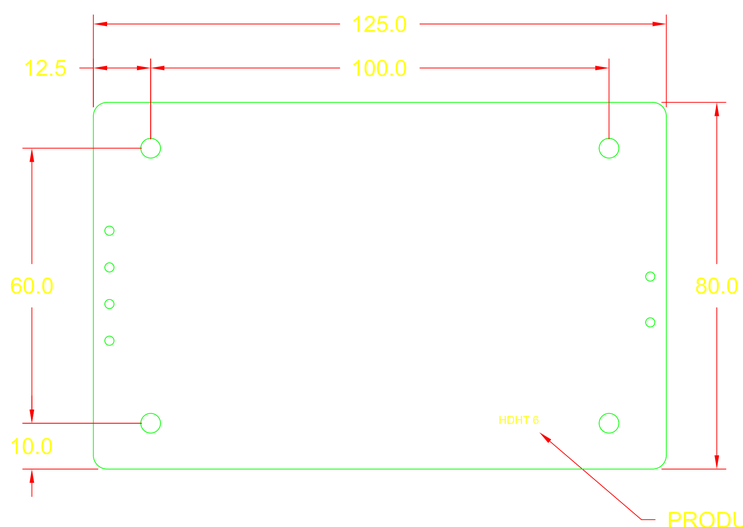

PRODUCT IDENTIFICATION

COMPONENT PLACEMENT AND TRACK LAYOUT TO BE DETERMINED BY VENDOR

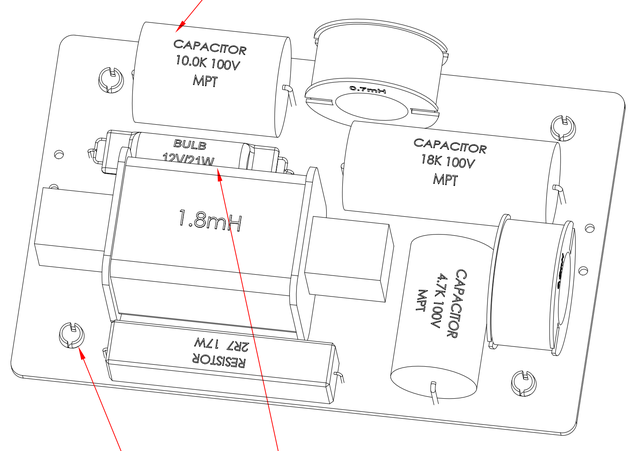

BULB TO BE SECURED TO PCB USING SILICONE ADHESIVE.

4 STAND OFF SPACERS - SAME AS USED ON 7300 0824 CROSSOVER

B1	12V/21W		0.5ohm@25°C	3615 0046
C1	4.7uF	100V DC	±10%	POLYPROP
C2	18uF	100V DC	±10%	POLYPROP
C3	10uF	100V DC	±10%	POLYPROP
R1	2R7	20W	±5%	WIREWOUND
L1	0.5mH	AIRCORE	DCR 1.4ohms	0.45mm WIRE
L2	0.7mH	AIRCORE	DCR 1.6ohms	0.45mm WIRE
L3	1.8mH	LAMINATED	DCR 0.2ohms	1.2mm WIRE

Part No.
7300 1170
First used on
HDHT 6
Issues

A	10/10/06	SW
B	16/11/06	GW
	L1 & L2 WIRE 0.45mm WAS 0.3mm, L3 WIRE 1.2mm WAS 1.5mm, R1 20W WAS 17W.	
1	10/10/06	GW
2	09/05/07	GW
	4 PLASTIC STAND OFF SPACERS ADDED TO CROSSOVER CR 8668	

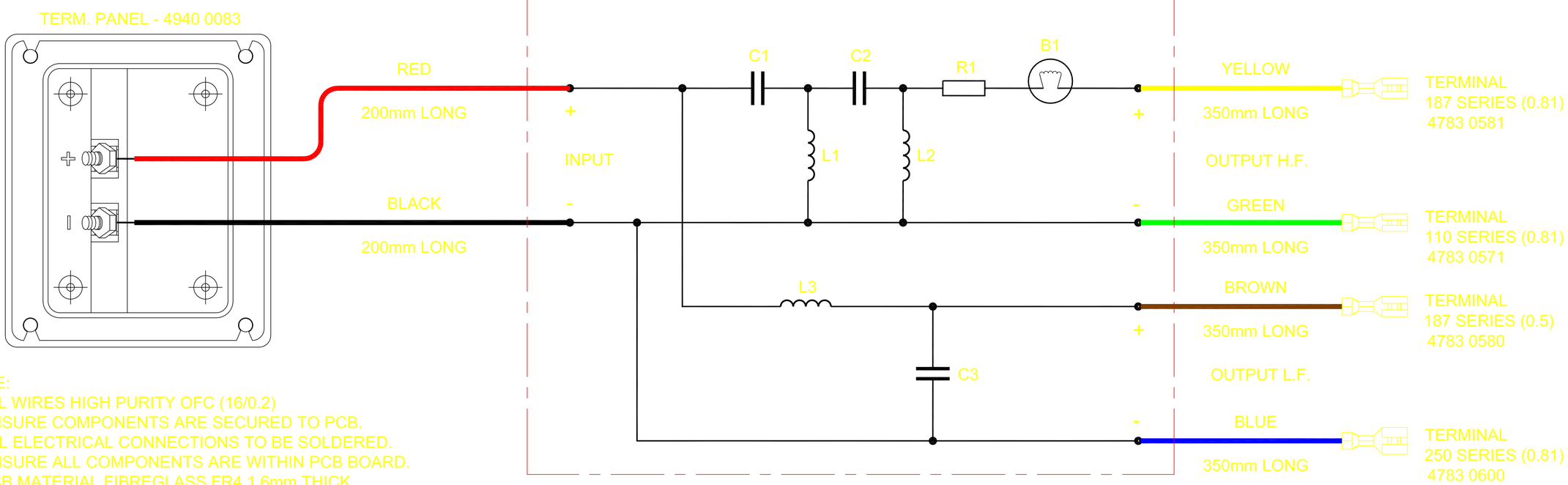

NOTE:
1. ALL WIRES HIGH PURITY OFC (16/0.2)
2. ENSURE COMPONENTS ARE SECURED TO PCB.
3. ALL ELECTRICAL CONNECTIONS TO BE SOLDERED.
4. ENSURE ALL COMPONENTS ARE WITHIN PCB BOARD.
5. PCB MATERIAL FIBREGLASS FR4 1.6mm THICK.
6. PCB COPPER FOIL 4oz.

TANNOY®

The contents, information and copyright of this document are the sole property of Tannoy Ltd and must not be published applied or copied without the express knowledge & permission of the owners.

MATERIAL

FINISH

ALL DIMENSIONS IN MILLIMETRES
Limits of tolerance unless stated:

One place of decimal dim.	±0.2mm
Two places of decimal dim.	±0.1mm
Holes 12.0mm dia & under	+0.1 -0.0mm
Holes over 12.0mm dia.	±0.4mm

RoHS Compliant

Drawn
Checked
Approved
Scale

TITLE CROSSOVER - TYPE 1599 HDHT 6

CROSSOVER - TYPE 1599 HDHT 6 A2 7300 1170